Characterization of a trapped ion platform: potential, micromotion, heating, and scattering

Amit Ghosh[1†], **Sapam Ranjita Chanu**[1†]

[1]Department of Physics, IIT Kanpur, Kalyanpur, Uttar Pradesh 208016

Synopsis Here I am going to present some simulation work related to our Ion trap design. We will discuss micromotion, frequency shift, Ion scattering and vacuum design.

Among several other Quantum Computing simulation platforms, trapped-ion qubits offer several advantages, including long coherence times and very high gate fidelity. We will use a Paul trap for trapping ^{40}Ca ions. The kinetic energy of an ion has three parts: One from secular motion, one from internal micromotion (IMM), and one from excess micromotion (EMM). Here, we will present a numerical simulation study of micromotion energies for ions and their effects. If there is a static external electric field, it will displace the ion position and can give rise to excess micromotion. Excess micromotion can also be caused by a phase difference between the RF blades or by trap blade misalignment. We will also show the heating and scattering effect in a trapped ion platform.

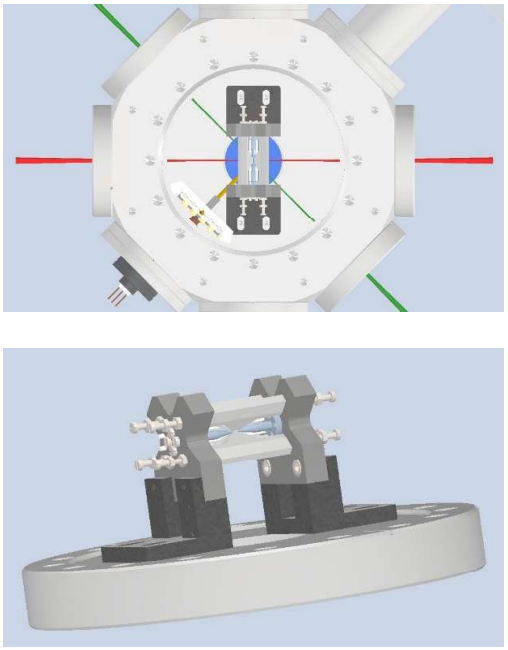

Figure 1. Ion trap geometry

References

[1] Berkeland D J, Miller J D, Bergquist J C, Itano W M and Wineland D J 1998 *J. Appl. Phys.* **83** 5025–5033

[2] Hong J, Kim M, Lee H and Lee M 2023 *Appl. Phys. B* **129** 16

[†]E-mail: agosh22@iitk.ac.in

[†]E-mail: sranjita@iitk.ac.in